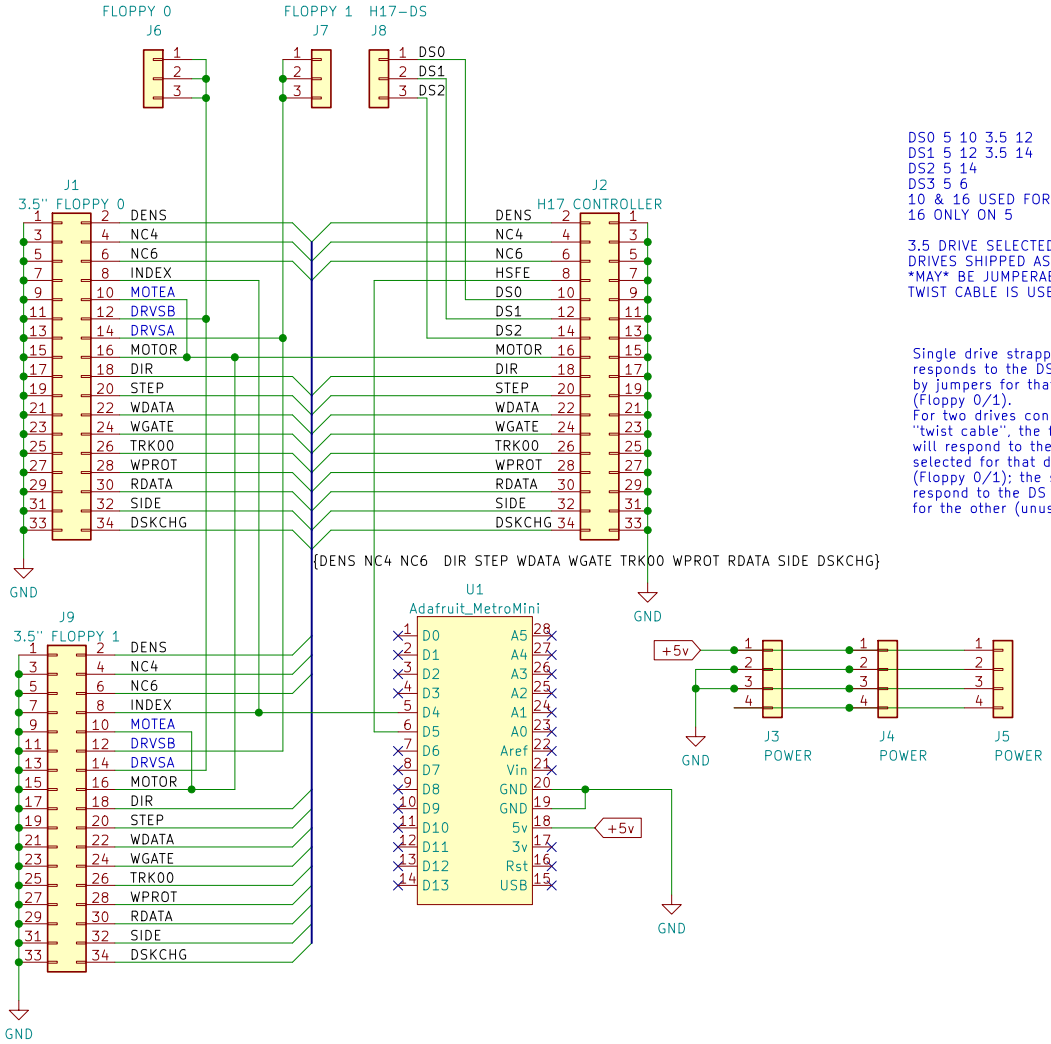

DS0 5 10 3.5 12
DS1 5 12 3.5 14
DS2 5 14
DS3 5 6
10 & 16 USED FOR MOTOR ON 3.5
16 ONLY ON 5

3.5 DRIVE SELECTED AS 10&14 (A) OR 12&16 (B)
DRIVES SHIPPED AS "B"
MAY BE JUMPERABLE TO "A"
TWIST CABLE IS USED ON PC TO FLOP SELECT LINES

Single drive strapped as "B"
responds to the DS line selected
by jumpers for that connector
(Floppy 0/1).
For two drives connected using
"twist cable", the first drive
will respond to the DS line
selected for that drive connector
(Floppy 0/1); the second drive will
respond to the DS line selected
for the other (unused) connector.

Sheet: /
File: HSFE_B.kicad_sch

Title:

Size: A4	Date:	**Rev:**
KiCad E.D.A. kicad (6.0.9)		Id: 1/1