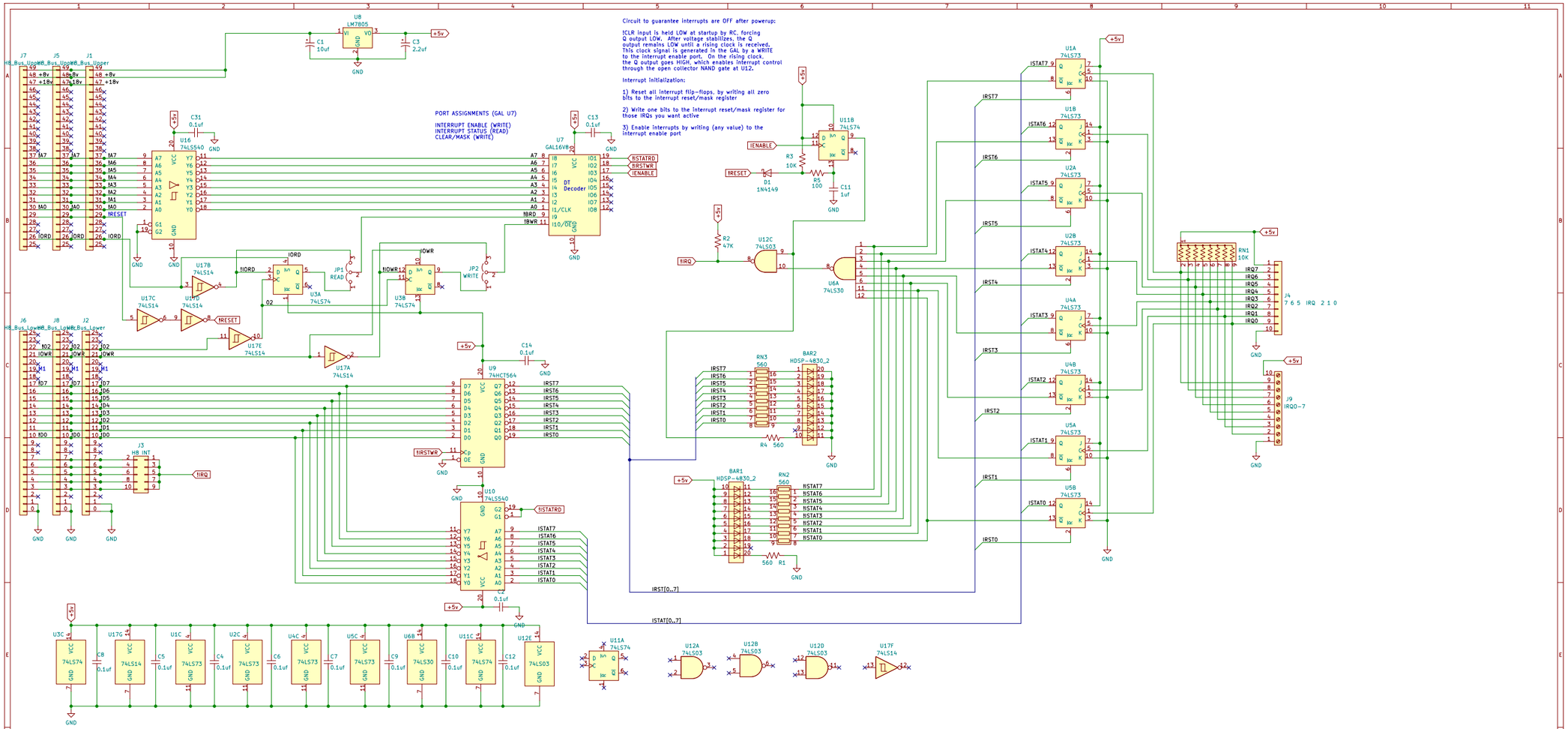

Sheet: /
File: H8 Interrupt_B.kicad_sch

Title:

Size: C	Date:	Rev:
KiCad E.D.A. kicad (6.0.9)		Id: 1/1