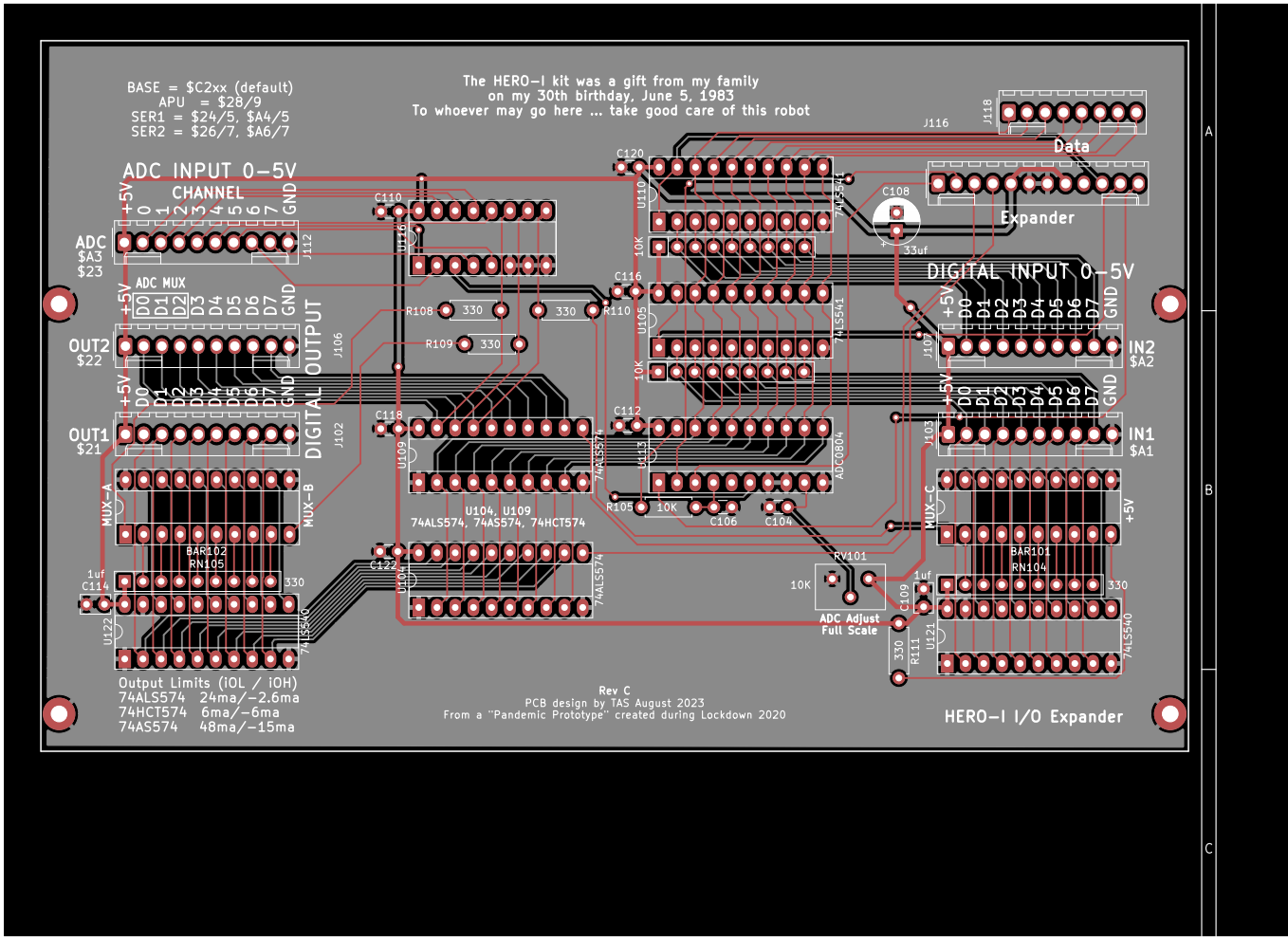
BASE = $C2xx (default)
APU = $28/9
SER1 = $24/5, $A4/5
SER2 = $26/7, $A6/7
The HERO-I kit was a gift from my family
on my 30th birthday, June 5, 1983
To whoever may go here ... take good care of this robot
ADC INPUT 0-5V
CHANNEL
+5V 0 1 2 3 4 5 6 7 GND
ADC
$A3
$23
J112
ADC MUX
+5V D0 D1 D2 D3 D4 D5 D6 D7 GND
OUT2
$22
J106
DIGITAL OUTPUT
OUT1
$21
J102
MUX-A
MUX-B
BAR102
RN105
1uf
C114
330
U122
74LS540
Output Limits (IOL / IOH)
74ALS574 24ma/-2.6ma
74HCT574 6ma/-6ma
74AS574 48ma/-15ma
C110
U116
R108
330
R109
330
C118
U109
74ALS574
U104, U109
74ALS574, 74AS574, 74HCT574
C122
U104
74ALS574
C120
U110
74LS541
C108
33uf
C116
U105
10K
R110
C112
U113
ADC0804
R105
10K
C106
C104
RV101
10K
ADC Adjust
Full Scale
C109
1uf
R111
330
U121
74LS540
J116
J118
Data
Expander
DIGITAL INPUT 0-5V
J107
IN2
$A2
J103
IN1
$A1
MUX-C
BAR101
RN104
330
74LS540
Rev C
PCB design by TAS August 2023
From a "Pandemic Prototype" created during Lockdown 2020
HERO-I I/O Expander
A
B
C